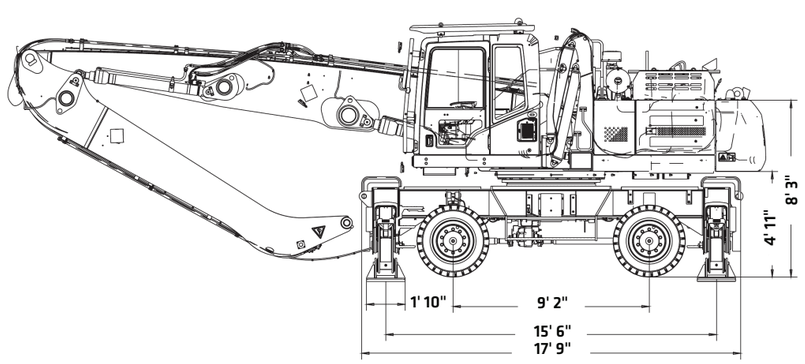

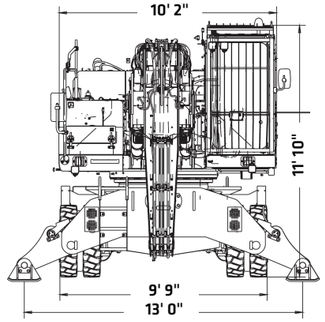

DIMENSIONS

Overall Length (Excluding Boom and Gripper)	19' 0"
Overall Width (Excluding Boom and Gripper)	9' 9"
Overall Height (Excluding Boom and Gripper)	11' 10"
Cabin Elevation Height	8' 8"
Outrigger Transverse Span (Operating)	13' 0"
Outrigger longitudinal span (Operating)	15' 6"
Tail Swing Radius	10' 4"
Track Width	7' 10"
Wheelbase	9' 2"
Boom Length-Option 1	26' 3"
Boom Length-Option 2	23' 11"
Stick Length-Option 1	19' 8"
Stick Length-Option 2	16' 9"

In the interest of continual equipment development, SANY America Inc. reserves the right to change these specifications at any time without prior notification.
©2026 SANY America Inc. HEXPS26SMHW30G5001

INDUSTRY'S STRONGEST STANDARD WARRANTY | 3-YEAR* 6,000 HOURS

*Warranty applies to 2026 Material Handler Models

SANY America Inc. 318 SANY Way
Peachtree City, Georgia 30269
470.552.SANY sanyamerica.com

SMHW30G5

SANY

MATERIAL HANDLER

63,934 LBS OPERATING WEIGHT
194 HP NET HORSEPOWER
39' 4" MAX OPERATING REACH

TECHNICAL SPECIFICATIONS

MACHINE DATA	
Engine	Cummins QSB6.7-C195 Stage 5
Engine Emission	Stage V
Engine Rated Power	194 hp / 2,000 rpm
Engine Rated Torque	625 lb-ft / 1,500 rpm
Operating Weight (Excluding Grip)	63,934 lbs
Max. Operating Radius (Without Gripper)	39' 4"
Max. Operating Depth (Without Gripper)	10' 2"
Max. Operating Height (Excluding Gripper)	39' 4"
Max. Rotating Speed	8.0
Max. Gradeability	0.3
Max. Traveling Speed	12.4 miles/h
Min. Turning Radius	27' 10"
Hydraulic System Relief Pressure	4,641 psi
Hydraulic System Total Displacement	0.034 L + 0.034 L + 0.004 L
System Voltage	24 v
Load Capacity (Maximum Range)	10,141 lbs @ 39' 4"
Load Capacity (Usual Range)	19,180 lbs @ 24' 7"
Drive Mode	Front-wheel Steering

COMPONENTS	
Radiator	Combination Radiator ZH1070x500x1357-S100Y74Z28
Slewing Reducer	Gearbox Assembly GS14D20C.0
Slewing Bearing	Turning bearing SSF1405.40CWHII
Central Rotary Joint	Central Swivel Connector Assembly SMHW30G5.8.2.1
Main Pump	Duplex Piston Pump Assembly K7V125DTP1Y8R-OE18-V
Transmission	Transmission 360
Front Axle	Axle LT41PL75
Rear Axle	Axle D41PL75

*Operating weight is for the SMHW30G5 with no attachments, and standard stick.

SANY America Inc. reserves the right to change these specifications at any time without prior notification. ©2026 SANY America Inc. HEXPS26SMHW30G5001

MATERIAL HANDLER SMHW30G5

STANDARD FEATURES

ENGINE
- Cummins QSB6.7-C195 Stage 5
- Auto-idle & Auto-idle-shutdown
- Dual-element dry air filter
- Batteries 24V (2 – 12V)
- Coolant Expansion tank
- Electronic engine control
- Enclosed fan guard
- Engine coolant to –34 deg. F
- Fuel filter with water separator
- Full-flow oil filter
- Turbocharger with charge air cooler
- High flow hydraulically powered cooling fan
- 500-hour engine-oil-change interval
- 70% (35 deg.) off-level capability
- Engine air precleaner
- Severe-duty fuel filter

HYDRAULIC SYSTEM
- Spring-applied, hydraulically released automatic swing brake
- Auxiliary hydraulic-flow adjustments through monitor
- Control pattern change valve
- Auxiliary hydraulics with 1 and 2-way combination piping for high flow
- Auxiliary hydraulics with 2- way rotation piping and controls
- Auxiliary pilot and electric controls
- Quick coupler plumbing and control
- Boom Cylinder
- Motion Arm Explosion-proof Valve
- Hydraulic Control Valve / Multi-way Valve
- Arm Cylinder
- Blast-proof Gate Valves

UNDERCARRIAGE
- Front axle LT41PL75
- Rear axle D41PL75
- Planetary drive with axial piston motors
- Transmission 360
- Gearbox assembly GS14D20C.0
- Turning bearing SSF1405.40CWHII
- Central swivel connector assembly SMHW30G5.8.2.1
- Propel motor shields
- 2-speed travel selection
- Undercarriage frame opening guard

BOOM & STICK
- Boom (Option 1) 26' 3"
- Boom (Option 2) 23' 11.4"
- Stick (Option 1) 19' 8"
- Stick (Option 2) 16' 9"

UPPERSTRUCTURE
- Right-hand, left-hand, and counterweight mirrors
- Vandal lock: Cab door /Service door/ Toolbox/Cab Filter
- Debris screen in side panel
- Remote-mounted engine oil and fuel filters
- Heavy duty triangle channel frame guard

ATTACHMENTS
- Convenient grease points
- Centralized lubrication system
- Oil-impregnated bushings
- Reinforced resin thrust plates

OPERATOR'S STATION
- Adjustable independent-control positions
- AM/FM radio with USB charging and Bluetooth® connectivity
- Auto climate control/air conditioner/heater/pressurizer
- Built-in Operator's Manual storage compartment and manual
- 12 and 24V outlets 60 watt 5 amp
- Deluxe heated air suspension cloth seat with adjustable armrests
- Heavy duty rubber floor mat
- Front windshield wiper with intermittent speeds
- Illuminated gauge: diesel exhaust fluid, engine coolant, and fuel levels
- Horn, electric
- Hour meter, electric
- Hydraulic shutoff lever, all controls
- Interior light
- Large cup holder
- Digital Power mode selection: 3 power modes
- Digital tool selection: bucket, shear, hammer, etc.
- 10" Touch screen LCD monitor
- Motion alarm with cancel switch (conforms to SAE J994)
- Auxiliary hydraulic control switches in right console lever
- 3" Orange retractable seat belt
- Transparent overhead hatch
- Heated or cooled food/beverage storage
- Hydraulic oil filter restriction indicator light
- Protection screens for cab front, rear, and side (optional)

ELECTRICAL
- 60-amp alternator
- Ground level electrical disconnect (lockout tag out)
- Blade-type multi-fused circuits
- Positive-terminal battery covers
- Rearview and blind-side camera

LIGHTS
- Bright LED worklight package

In the interest of continual equipment development, SANY America Inc. reserves the right to change these specifications at any time without prior notification.
©2026 SANY America Inc. HEXPS26SMHW30G5001

LIFTING PERFORMANCE

Standard 26' 3" Boom
Standard 19' 8" Stick
Standard 7' 10" Track Width
No Bucket

Ratings are based on ISO 10567:2007. Lift capacity does not exceed 75% of tipping load with the machine on firm, level ground or 87% of hydraulic lifting capacity.

LIFT CAPACITIES OF MATERIAL HANDLER

(Boom 23' 11", Stick 16' 9", Unit: Ton)

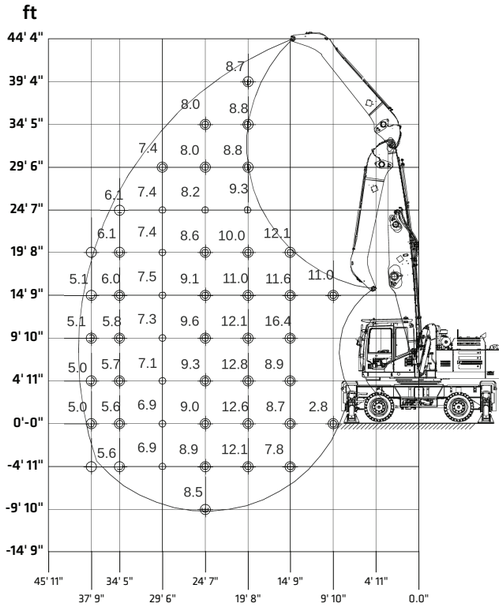

LIFT CAPACITIES OF MATERIAL HANDLER

(Boom 26' 3", Stick 19' 8", Unit: Ton)

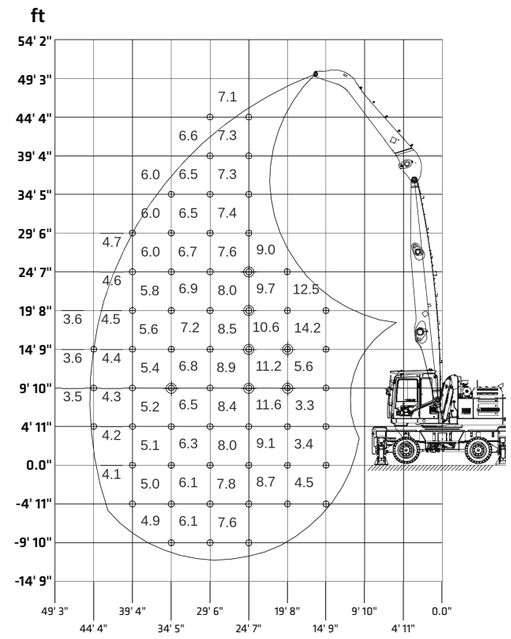

In the interest of continual equipment development, SANY America Inc. reserves the right to change these specifications at any time without prior notification.
©2026 SANY America Inc. HEXPS26SMHW30G5001

sanyamerica.com ||| SMHW30G5